IMPACT ACOUSTIC®

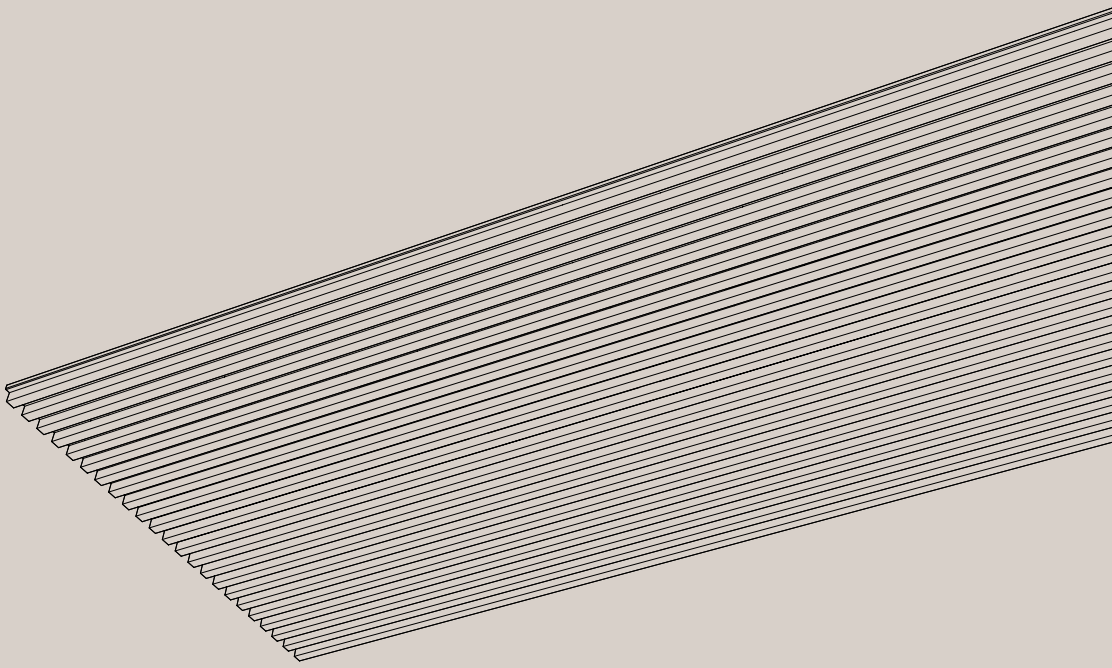

Track
Ceiling Panels

717.12.10.000.00
717.12.11.000.00
717.12.12.000.00
717.12.13.000.00

TECHNICAL DATA SHEET

HABITAT MATTER
habitatmatter.com
samples@habitatmatter.com

Track Ceiling Panels
General Information

HABITAT MATTER
habitatmatter.com
samples@habitatmatter.com

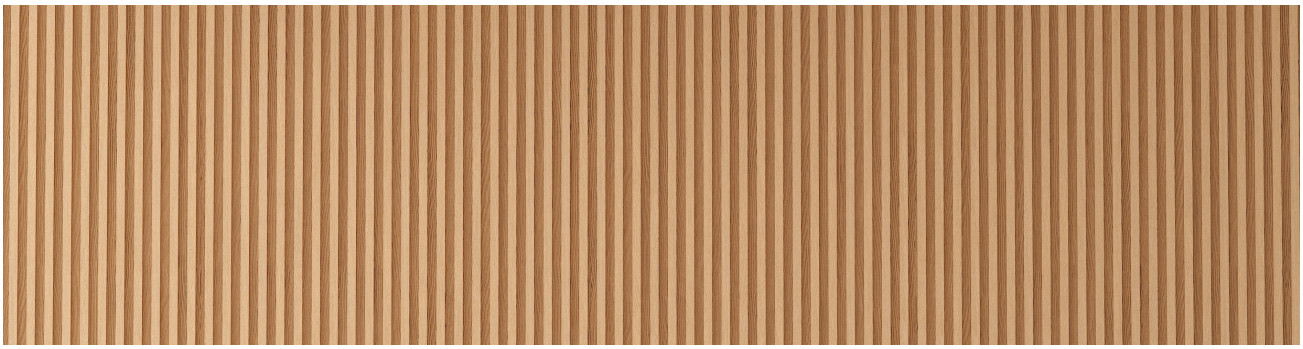

Data

Applicable article numbers

ARCHISONIC® Felt		ARCHISONIC® Riftcut	
717.12.10.000.00	717.12.11.000.00	717.12.12.000.00	717.12.13.000.00

Single element dimensions[1]

Width	1200 mm	47″	
Length	2800 mm	110″	
Thickness	44 mm	1 3/4″	*(without substructure)*
Total thickness	70 mm	2 3/4″	

Material

Panel	100% PET (60% post-consumer)
Substructure Profiles	Aluminum anodized black

Weight[2]

Panel	24kg (±10%)	53 lbs (±10%)	*(without substructure)*
Substructure Profiles	2kg (±10%)	4.4 lbs (±10%)	*(weight of four profiles*

Included

Track Panels

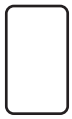

Stiffening profiles 4x

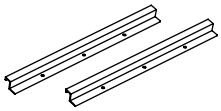

Endcaps 2x (optional)

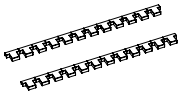

C00093

Installation guide



Warranty 10 years[3]



1 - all dimensions are nominal 2 - all weight values are nominal

Track Ceiling Panels

Geometry Information[1]

717.12.**10**.000.00 and 717.12.**12**.000.00 - Regular

HABITAT MATTER
habitatmatter.com
samples@habitatmatter.com

FRONT

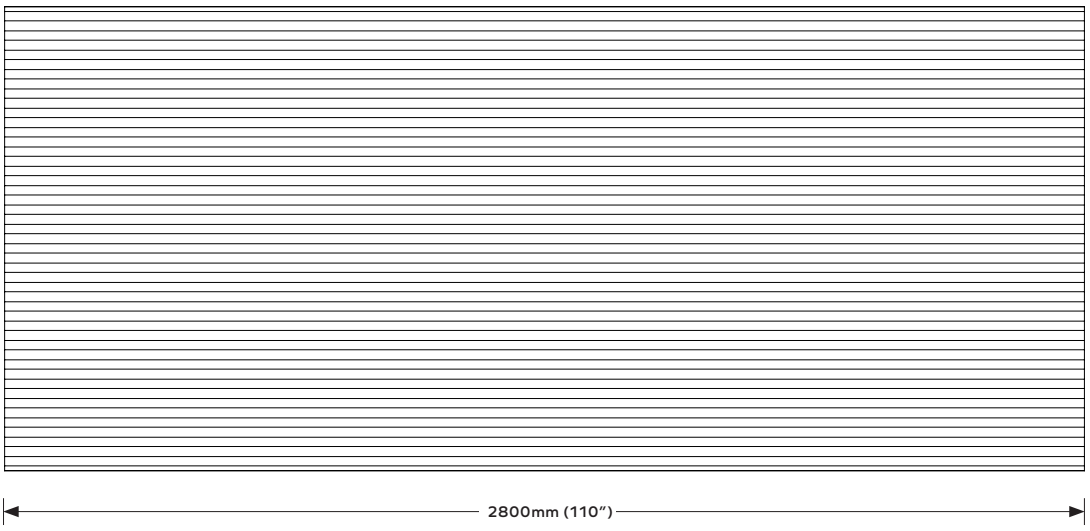

SIDE

SIDE

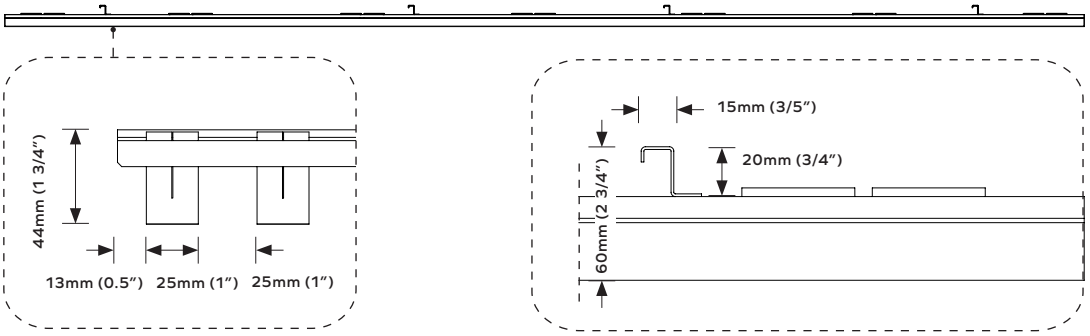

BACK

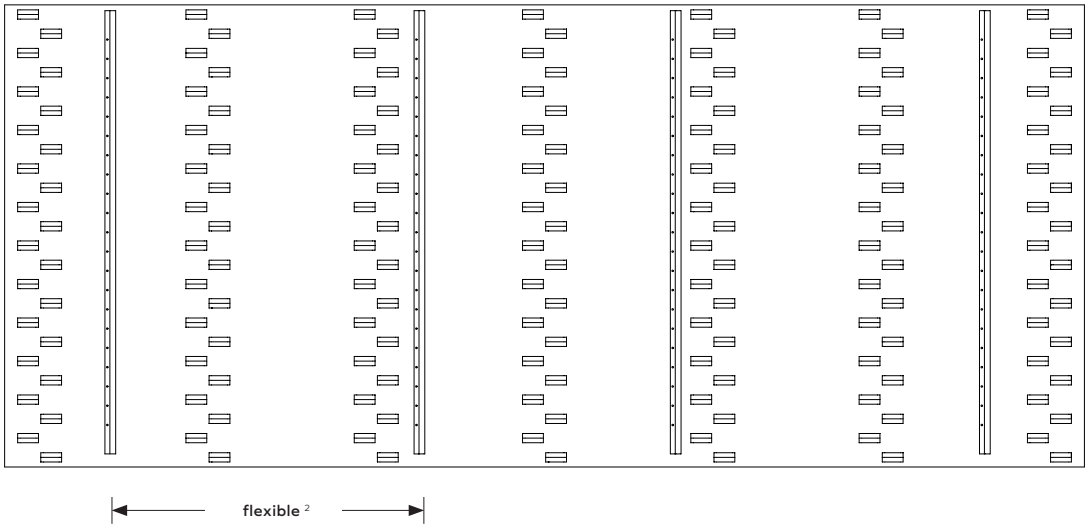

1 - all dimensions are nominal

2 - The structural profiles are installed on site. The exact positionning can be adjusted by the installer.

Track Ceiling Panels

Geometry Information[1]

717.12.**11**.000.00 and 717.12.**13**.000.00 - Edge

HABITAT MATTER
habitatmatter.com
samples@habitatmatter.com

FRONT

SIDE

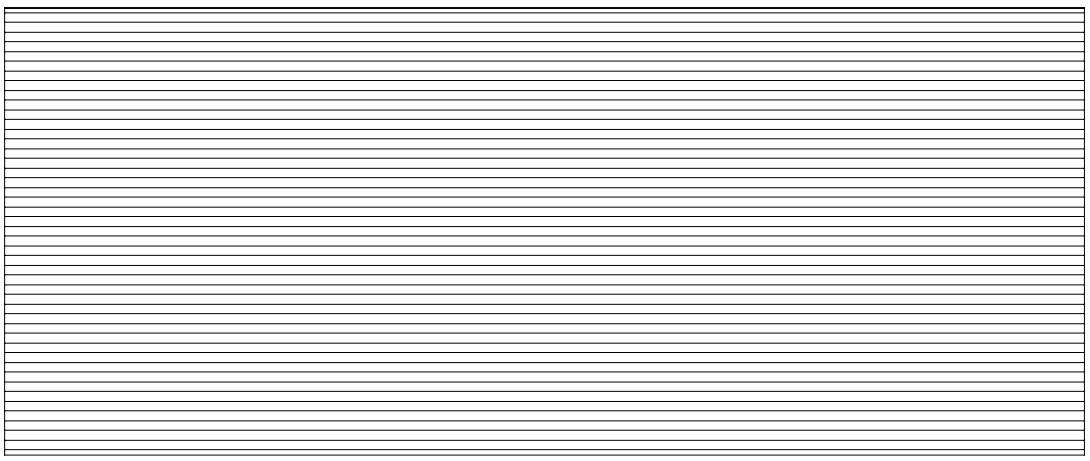

SIDE

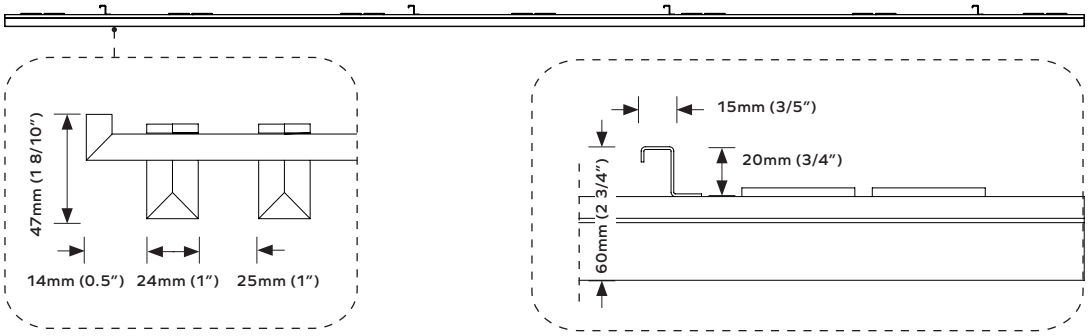

BACK

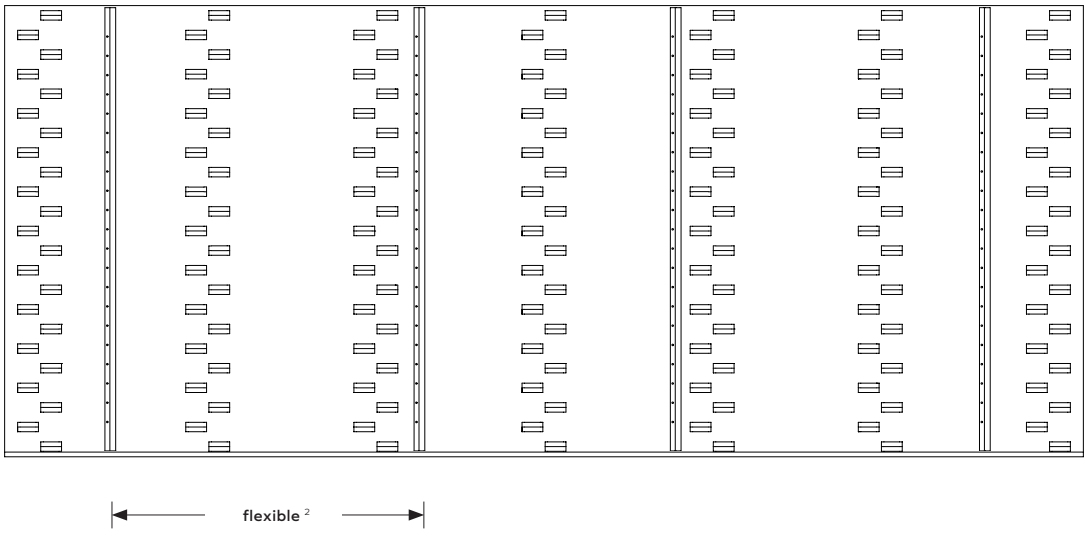

1 - all dimensions are nominal 2 - The structural profiles are installed on site. The exact positionning can be adjusted by the installer.

Track Ceiling Panels
Geometry Information

HABITAT MATTER
habitatmatter.com
samples@habitatmatter.com

Front side perspective

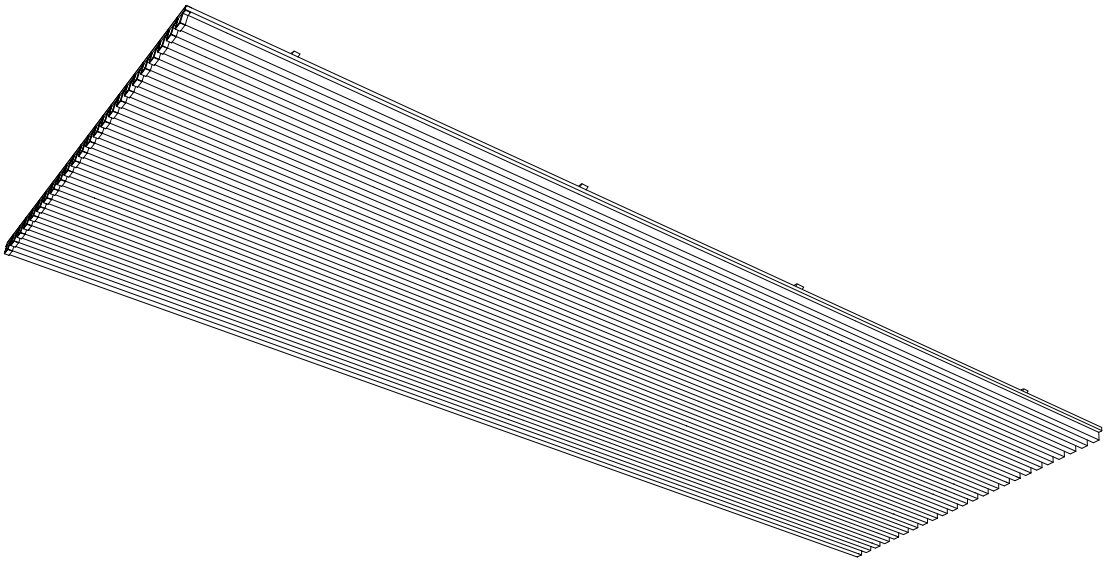

Back side perspective

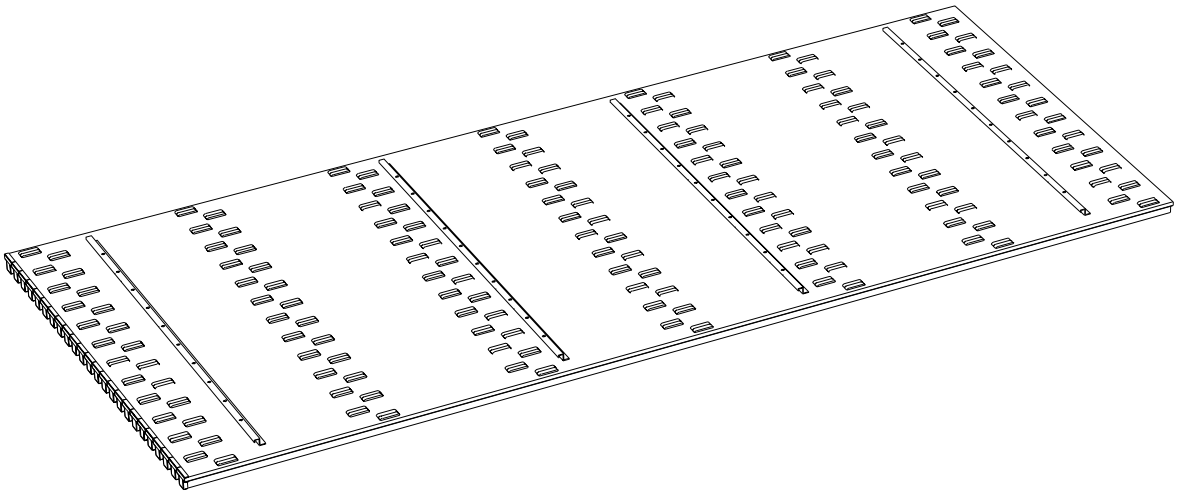

[1] all dimensions are nominal

Track Ceiling Panels
Product Family

HABITAT MATTER
habitatmatter.com
samples@habitatmatter.com

Track panels are available as a product family of 1 Track Wall Panels and 2 Track Ceiling Panels.

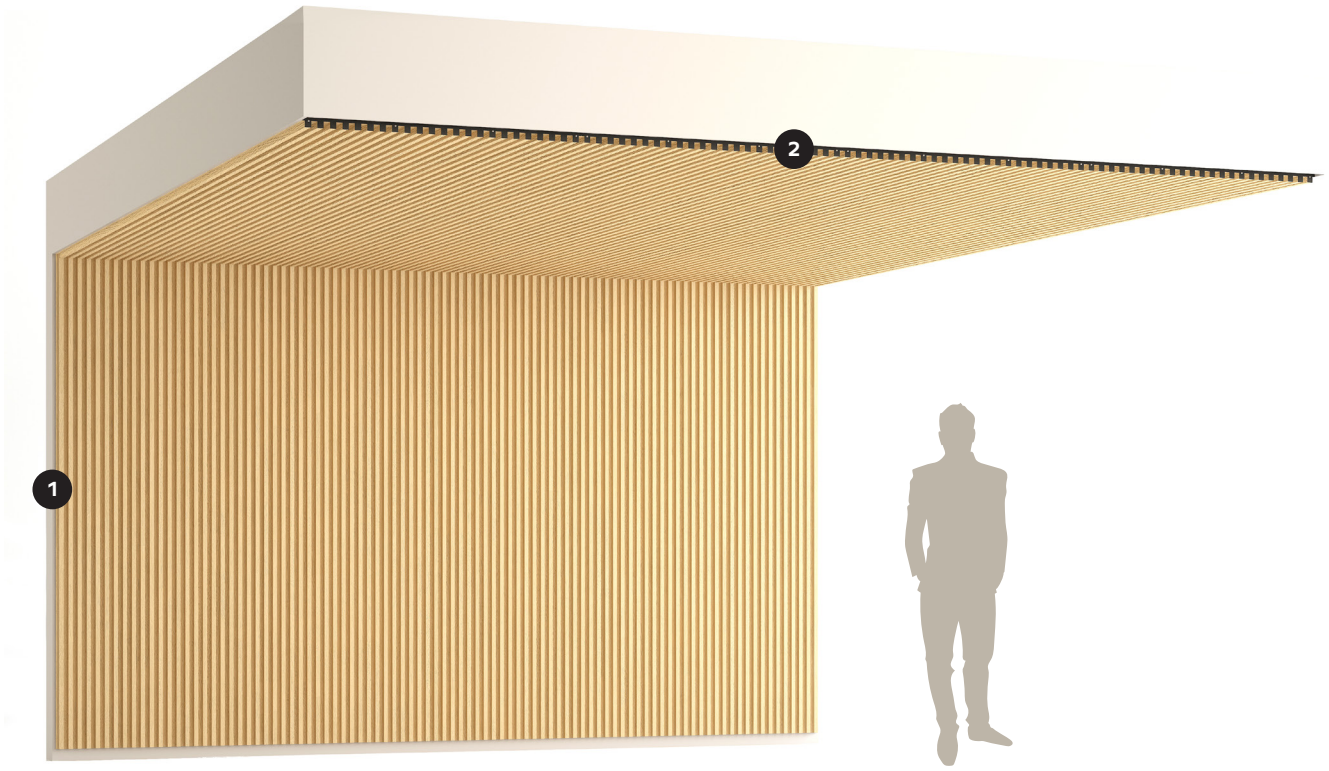

Track Ceiling Panels
Edge Treatment

HABITAT MATTER
habitatmatter.com
samples@habitatmatter.com

1 Standard edge treatment *(717.12.10.000.00, 717.12.12.000.00)*

Raw white ARCHISONIC® Felt panel is exposed at the long edge of the panel When face joining consecutive panels in assembly the edge remains visible only at the last panel in a series.

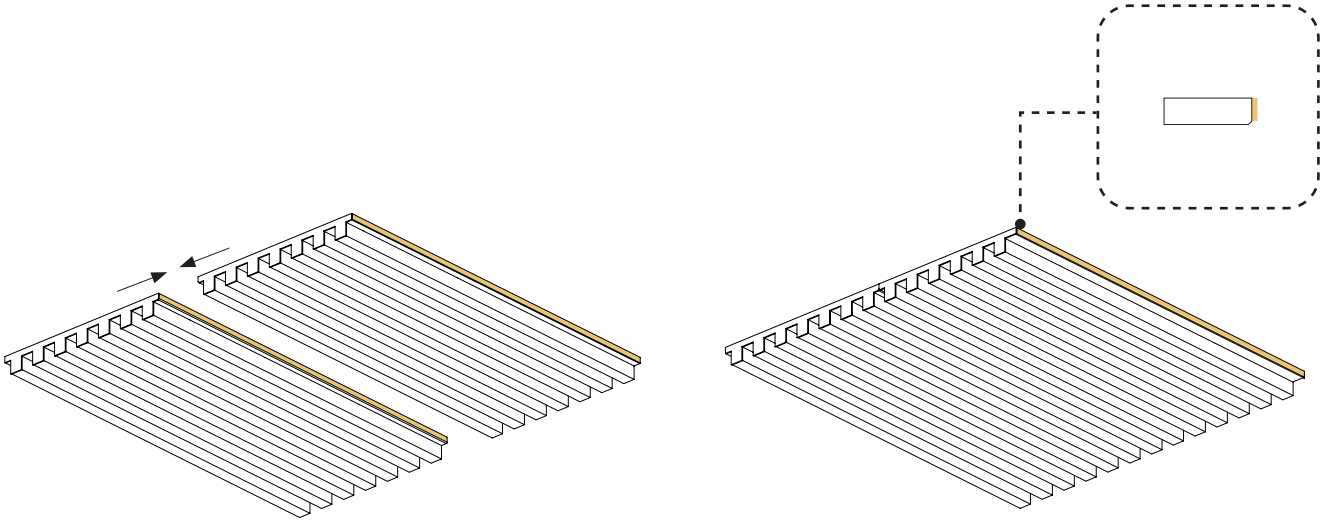

2 Flip-Edge treatment *(717.12.11.000.00, 717.12.13.000.00)*

If you require the las panel in the series to have concealed edge, without exposing the raw white ARCHISONIC® Felt colour , please request flip-edge edge treatment when contacting our consultants. Flip-Edge allows you to bend the panel edge upwards, hiding the exposed raw panel colour. The Flip-Edge can be glued on site using the hot glue gun.

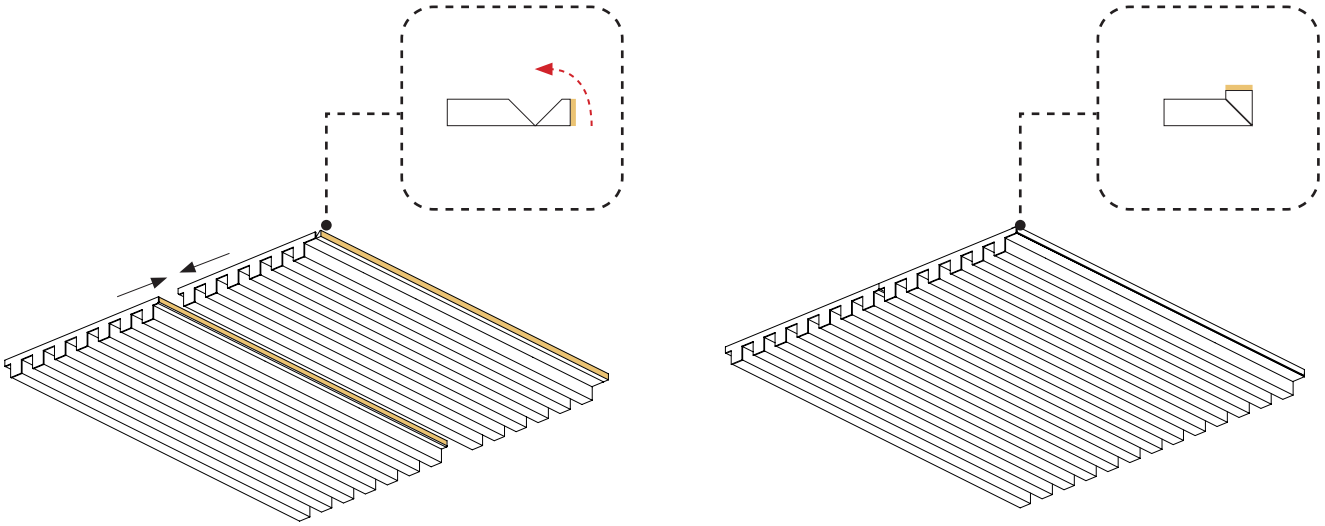

[1] all dimensions are nominal

Track Ceiling Panels
Assembly Guide

HABITAT MATTER
habitatmatter.com
samples@habitatmatter.com

1 Install stiffening profiles at the back of the panel using the provided screws

Profiles can be positioned flexibly, to match the substructure module. We recommend using similar spacing between profiles and installing at least 3 profiles, 4 profiles are recommended.

2 Install endcaps (3) at the end of the panel

The End Cap is sold separately and could be installed for the aesthetic purpose at the end of the panel series run.

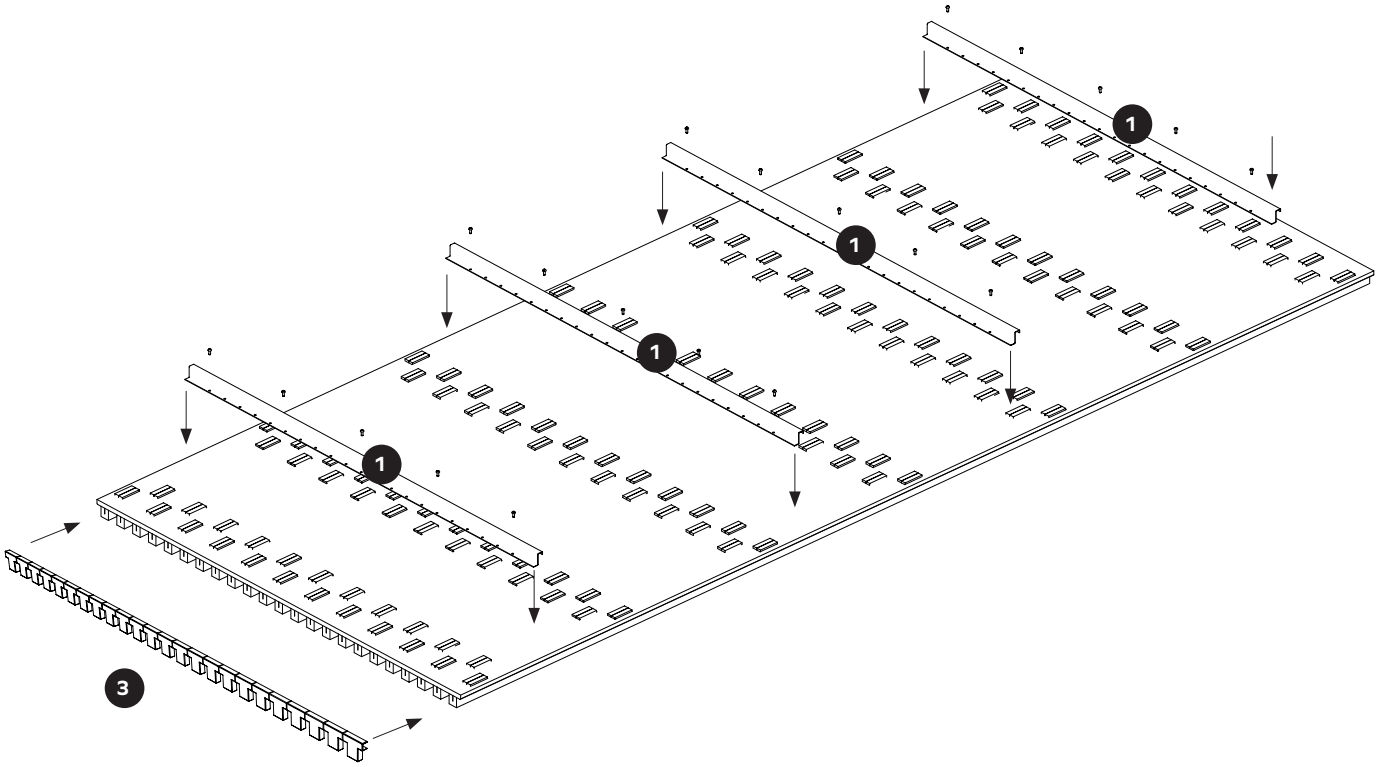

3 Mounting hardware

Depending on the selected mounting method, install included mounting hardware.

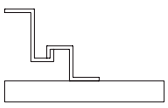

Profile to profile

secondary profile not included.

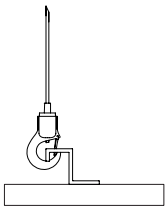

Cable hook to profile

822.10.00.597.00

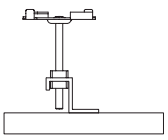

T-Grid Clip to profile

716.10.30.000.00

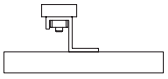

Magnet to profile

716.10.40.000.00

[1] all dimensions are nominal

Track Ceiling Panels
Installation Overview

HABITAT MATTER
habitatmatter.com
samples@habitatmatter.com

1 Primary and secondary 3rd party substructure

For the ceiling substructure we recommend using **Suspension System for METAL Ceilings METAL U-Profile + J-Bar** from **KNAUF Ceiling Solutions**. Essential elements are listed below:

- M300100 U-Profile
- M300119 Splice connector for U-Profile
- M300120 Plug-in clip for U-Profile
- M3001211 Clamping bracket for U-Profile
- M300026 J-Bar
- M300343B Splice connector for J-Bar
- M300307C Hanger for J-Bar

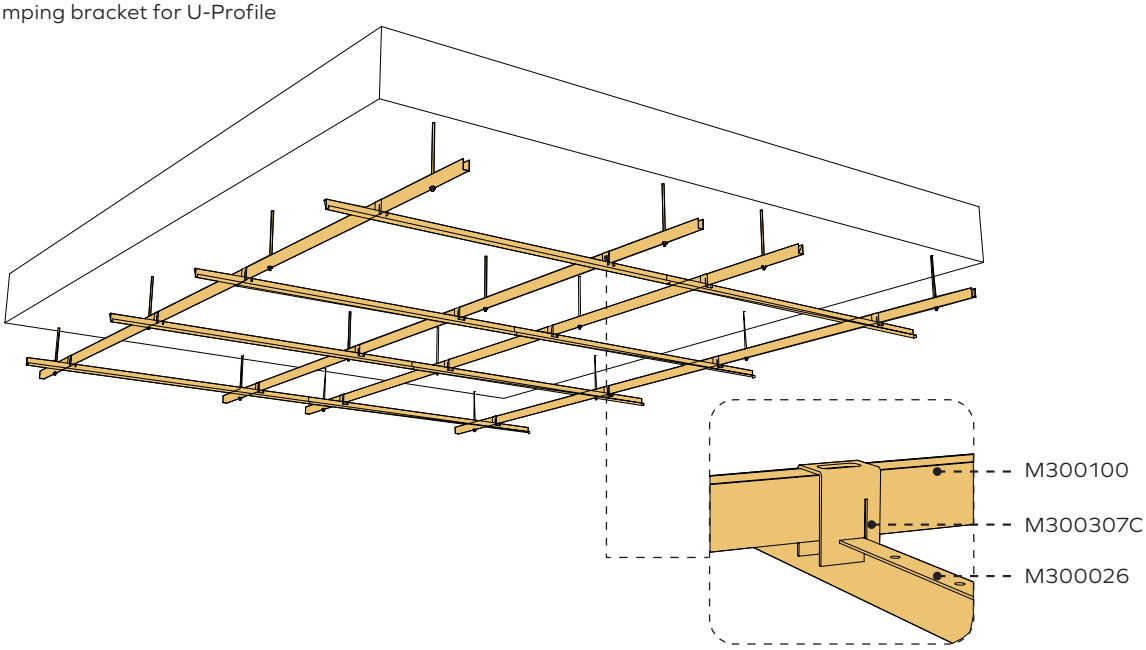

Recommended adjustable bracket substructure solution

2 Track panel attached to 3rd party substructure

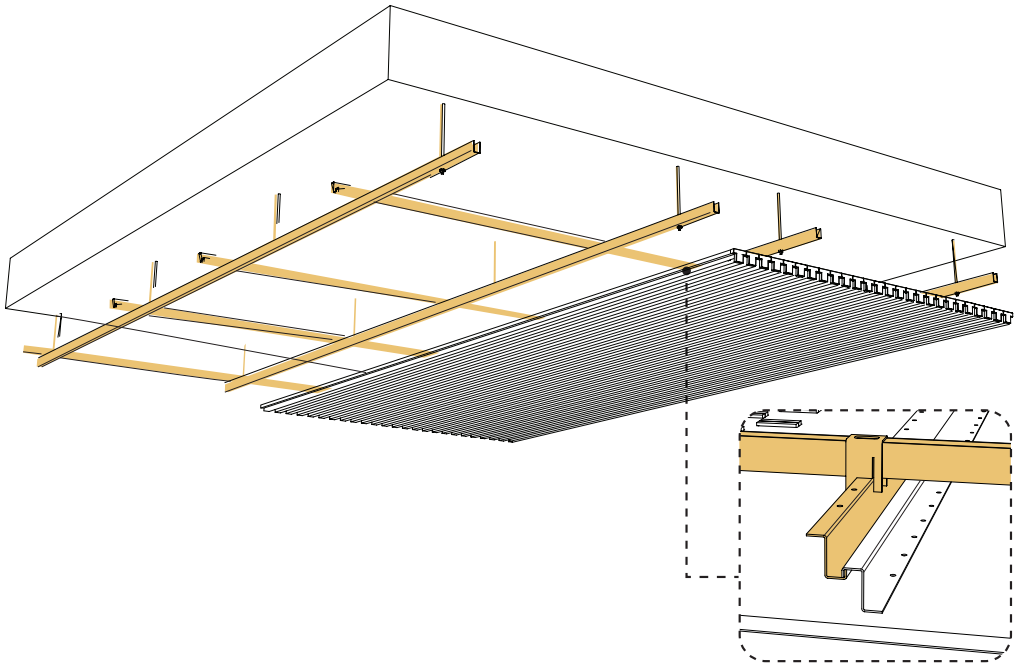

To mount the Track panels use the channel u shaped or similar profiles.

Track Ceiling Panels
Installation Overview

HABITAT MATTER
habitatmatter.com
samples@habitatmatter.com

3 On-Site adjustments.

Track Panels can be adjusted on site using typical carpenter tools like carpentry knife, jigsaw or hole saw. The aluminum profiles can also be trimmed using the metal jigsaw or rotary blade.

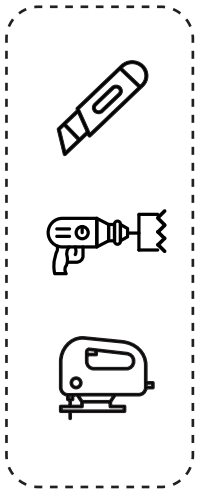

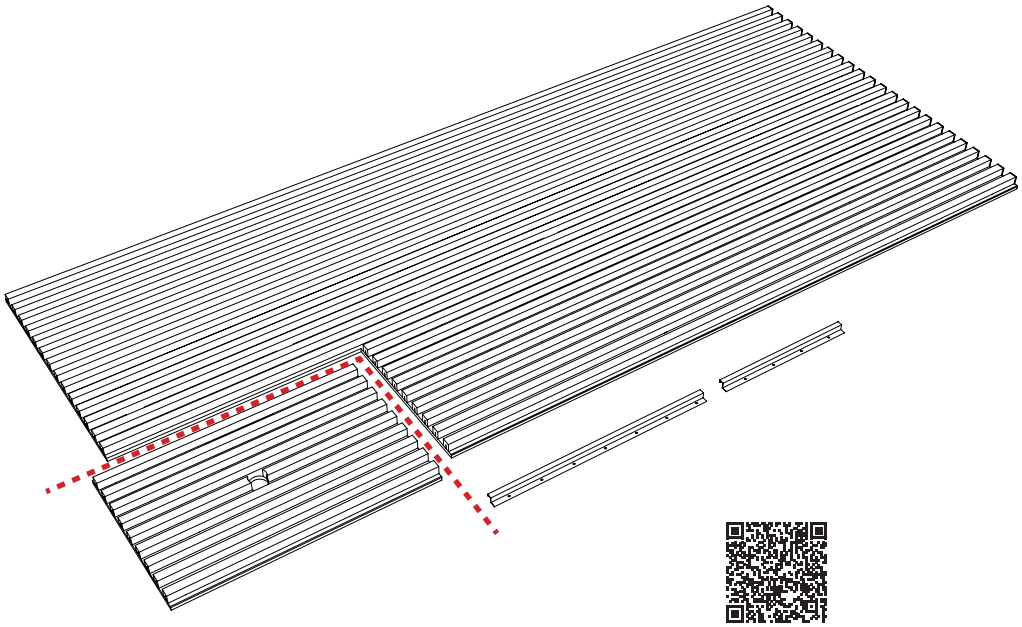

Online-Video verfügbar

4 Final assembly of Track panels

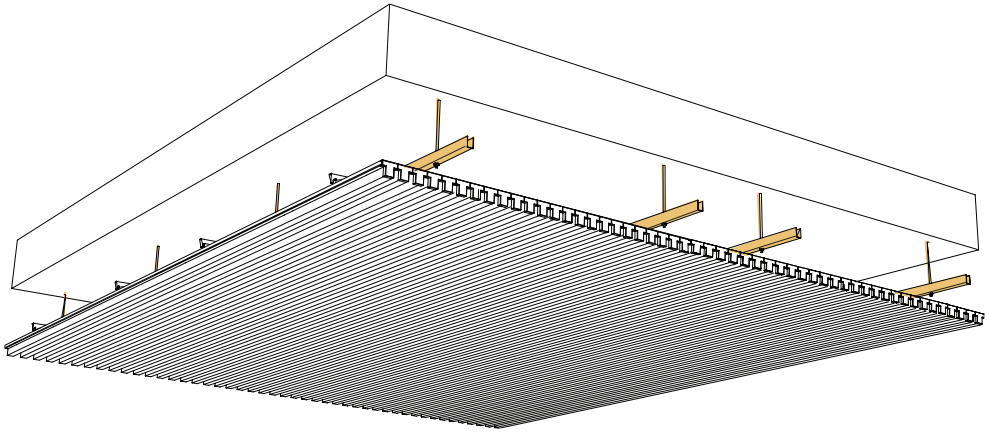

ARCHISONIC®
Colours

HABITAT MATTER
habitatmatter.com
samples@habitatmatter.com

Name	Snow White	Cloud	Smoke	Slate	Charcoal	Raven	Ground	Gull	Milk
Code	**500**	**103**	**442**	**444**	**542**	**550**	**108**	**144**	**404**
NCS	S 0300-N	S 1002-B	S 3005-R80B	S 4500-N	S 7502-B	S 8500-N	S 5005-Y20R	S2502-Y	S 0502-Y

Name	Linen	Dune	Jute	Fallow	Warm Stone	Truffle	Sunshine	Honeycomb	Electric Orange
Code	**107**	**104**	**920**	**238**	**105**	**539**	**846**	**139**	**464**
NCS	S 1505-Y30R	S 2005-Y	S 3010-Y30R	S 5010-Y30R	S 3010-Y50R	S 8502-R	S 1040-Y10R	S 2050-Y20R	S 0580-Y70R

Name	Terracotta	Soft Coral	Cinnabar	Shell Pink	Garnet	Poster Red	Hot Pink	Grape	Marine Blue
Code	**239**	**516**	**725**	**102**	**724**	**662**	**140**	**540**	**864**
NCS	S 4040-Y70R	S 2020-Y90R	S 6030-R	S 0510-R30B	S 5040-R10B	S 1080-R	S 2060-R20B	**S 5040-R40B**	S 4050-R70B

Name	Midnight	Royal Blue	Winter Sky	Deep Sea	Nocturne	True Navy	Ice Blue	Pacific Ocean	Lagoon
Code	**810**	**865**	**410**	**918**	**866**	**194**	**304**	**432**	**917**
NCS	S 7020-R70B	S 3560-R80B	S 2020-R90 B	S 5020-R90B	S 8010-R90B	S8005-B	S 0510-B	S 3040-B	S 7020-B30G

Name	Succulent	Spearmint	Seafoam	Nordic Pine	Moss	Grove	Pistachio	Lichen	Fern
Code	**712**	**706**	**710**	**311**	**439**	**317**	**315**	**160**	**180**
NCS	S 3020-B30G	S 1010-B90G	S 3010-G30Y	S 5030-G10Y	S 2040-G40Y	S 7020-G30Y	S 5020-Y	**S4005-Y**	S6010-G90Y

These NCS codes are the closest visual match available and may not be exact to blended fibres.

ARCHISONIC®

Colours

Experience our ARCHISONIC® Felt material with a stunning selection of 45 colours across 9 distinct families, thoughtfully curated by *Colour Hive* in London. Effortlessly combine colours harmoniously to suit your preferences. Discover more in our Materials brochure and order your free sample box today.

Colour fastness

Class 6

ISO 105-B02:A1

Order a free sample box

ARCHISONIC® Riftcut

HABITAT MATTER
habitatmatter.com
samples@habitatmatter.com

A Synthesis of Nature and Innovation

Developed in collaboration with German veneer specialists Schotten & Hansen and Swiss designer Ina Rinderknecht, ARCHISONIC® Riftcut adds a natural touch to our acclaimed Felt range.



ARCHISONIC® Riftcut Flax 50

Colour options

The printed shades form the basis of 24 colour spectrum, offering interior designers a sophisticated range of options linked to natural dyes.



Sustainable Ink

CP65 and RoHS3 compliant

GREENGUARD
PRODUCT CERTIFIED FOR LOW CHEMICAL EMISSIONS
UL.COM/GG
UL 2818
GOLD

Order a free sample set



ARCHISONIC® Riftcut Natural Collection

Natural Collection colour sets

Riftcut Natural Collection (NC) is a natural wood shade extension to our bestselling Riftcut. Developed in collaboration with German veneer specialists Schotten & Hansen, ARCHISONIC® Riftcut NC introduces 3 different colour groups: elegant brights, essential mids and classical darks.

107

ELEGANT BRIGHTS



240 Pebble



241 Sunlit



242 Blush

920

ESSENTIAL MIDS



243 Malt



244 Honey



245 Mocha

105

CLASSICAL DARKS



246 Woodsmoke



247 Bourbon



248 Twilight

Sustainable Ink

CP65 and RoHS3 compliant

GREENGUARD

PRODUCT CERTIFIED FOR LOW CHEMICAL EMISSIONS
UL.COM/GG
UL 2818

GOLD

Order a free sample set



HABITAT MATTER

habitatmatter.com
spec@habitatmatter.com

ARCHISONIC® Felt (Printed Material Specification

HABITAT MATTER
habitatmatter.com
samples@habitatmatter.com

Product Name	ARCHISONIC® Felt
Content	100% PET (60% certified post-consumer content)
Thickness[1]	12mm (0.47")
Max. Size	1200x2800mm (47"x110")
Acoustic[2, 4]	**ASTM:** NRC=0.9 I**SO**: αw= 0.95
Density[1]	2400 g/m² (0.49 lbs/ sqft)
Colour	**33** printed finishes.
Maintenance	To prevent dust and stains, regularly dust or vacuum with a soft brush. Avoid tools that might scratch the surface. Use mild detergents sparingly for tough stains, blotting instead of rubbing with a microfiber cloth. Test cleaning methods on a hidden area first to check for adverse effects.
Lead Time[3, 4]	21 days
Fire Rating[4]	DIN EN 13501-1: **B-s1, d0** ASTM E84 **Class A**
VOC Emission[4]	28 Days French Regulation **A+** ASTM E84 **Pass** Breeam® (International, UK, NL, SE, NOR) **Exemplary** CDPH (CDPH/EHLB/Standard-Methode V1.2) **Pass**
Certifications[4]	Declare label, Cradle to Cradle, UL Environmental Product Declaration, Member of US Green Building Council, Ecobau 1st Priority, Climate-KIC, VOC emissions in LEED EQ credit (low-emitting products), SCS Recycled Content
Ink Certifications	UL Greenguard, No NVC, No VOCs, No TPO, Vegan, compliant with California Prop65 (CP65) and European Directive RoHS3
Durability	Contract

1 - all values are nominal 2 - measured with 300mm air cavity 3 - depending on the location and type of product

Climate-KIC is supported by the EIT, a body of the European Union