Wall Panels
General Information

HABITAT MATTER
habitatmatter.com
spec@habitatmatter.com

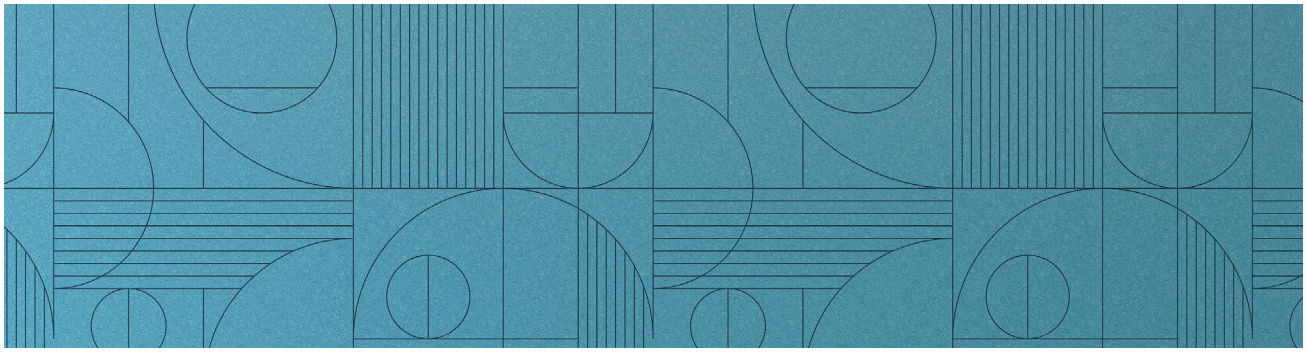

Data

Applicable article numbers

731.24.10-30.000.00 and .01
731.12.10-30.000.00 and .01

Total Dimensions[3]	**24mm / 12 mm**	**0.9" / 0.5"**
Height	2400mm / 2800mm	95" / 110"
Width	1800mm / 1200mm	71" / 47"

Custom solutions available

Material

Wall Covering	100% PET (60% post-consumer) in 36 colors	

Extended document available

Weight[1]

24mm / 0.95"	4 kg/m2	0.82 lbs/sq.ft
12mm / 0.47"	2.4 kg/m2	0.49 lbs/sq.ft

Included

PET Panels

Installation guide

Warranty 2 years[2]

1 – all weights are nominal

2 – Impact Acoustic warranty terms apply

3 – all dimensions are nominal

HABITAT MATTER
habitatmatter.com
spec@habitatmatter.com

Wall Panels
Specification Guide

Ensure you make the perfect choice by choosing our solutions for your next project. To get started, simply define some basic information and constraints about your space. Then explore our range of standard solutions or contact us directly for a more in-depth discussion of personalised customized options.

1 Prepare this information:

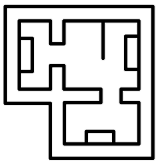

Project Area

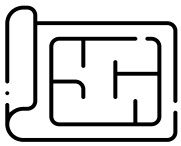

Plans



Other Considerations

2 Specify your Wall Covering:

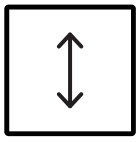

Material Thickness

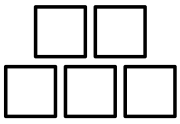

Quantity

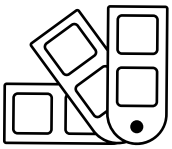

Color

3 Mount options:

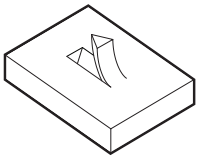

Undercover mount[1]

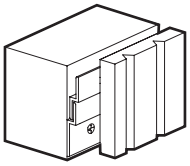

Z-Clip profiles



Spray adhesive

4 Article numbers:

732	Material Thickness[2]	12	Color	Mount type
732	24mm	12	Choose colour	00
	12mm			

Example: 732.24.12.662.00

Wall Covering - Kingscross, 2400 x 1800 x 24mm, 662 - Poster Red, 00 - Undercover mount

1 – Patent Pending No.102024000009088 2 – all dimensions are nominal

HABITAT MATTER
habitatmatter.com
spec@habitatmatter.com

Wall Panels

Installation methodes overview

Undercover Mount (standard) *Patent Pending*[1]

All our Wall Covering products come with pre-cut **Undercover** attachment points. Those points are distributed along the edge (10-15mm offset) and in the middle of the panel. **Undercover** mounting system allows for concealed mechanical attachment of the panel to the mounting surface. The **installation hardware** (screws, bolts) needs to be selected in accordance to the surface on which panels are applied, and are **not included.**

1 **Locate the Undercover cuts on the panel**

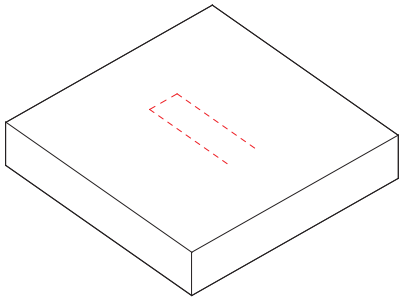

2 **Pull out the edge**

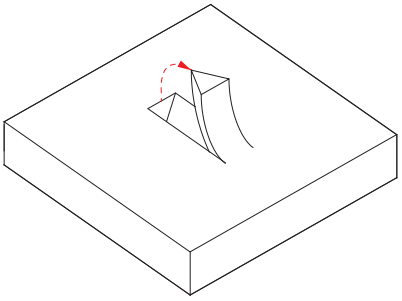

3 **Install hardware**

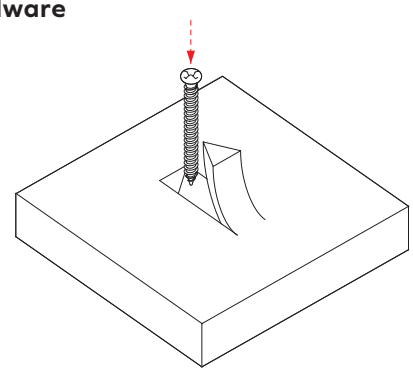

4 **Close**

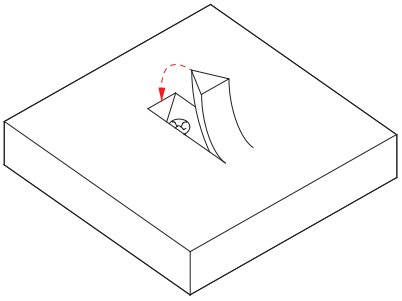

For full installation manual check our **product page.**

Alternative methods

Please note, that selected hardware for alternative installation methods is not included in a default delivery scope and needs to be accounted for separately.

1 – Patent Pending No.102024000009088

Fon

Geometry Information

HABITAT MATTER
habitatmatter.com
spec@habitatmatter.com

Fon 24mm

Applicable articles numbers

732.24.25.000.00 and .01

Scope of delivery

For each 24mm item you will receive a set of 1x PET panels (in the dimensions below)

Applicable articles numbers

These panels are mounted with a concealed attachment system. For other options contact our consultants.

Fon 12mm

Applicable articles numbers

732.12.25.000.00 and .01

Scope of delivery

For each 12mm item you will receive a set of 1x PET panels (in the dimensions below)

Applicable articles numbers

These panels are mounted with a concealed attachment system. For other options contact our consultants.

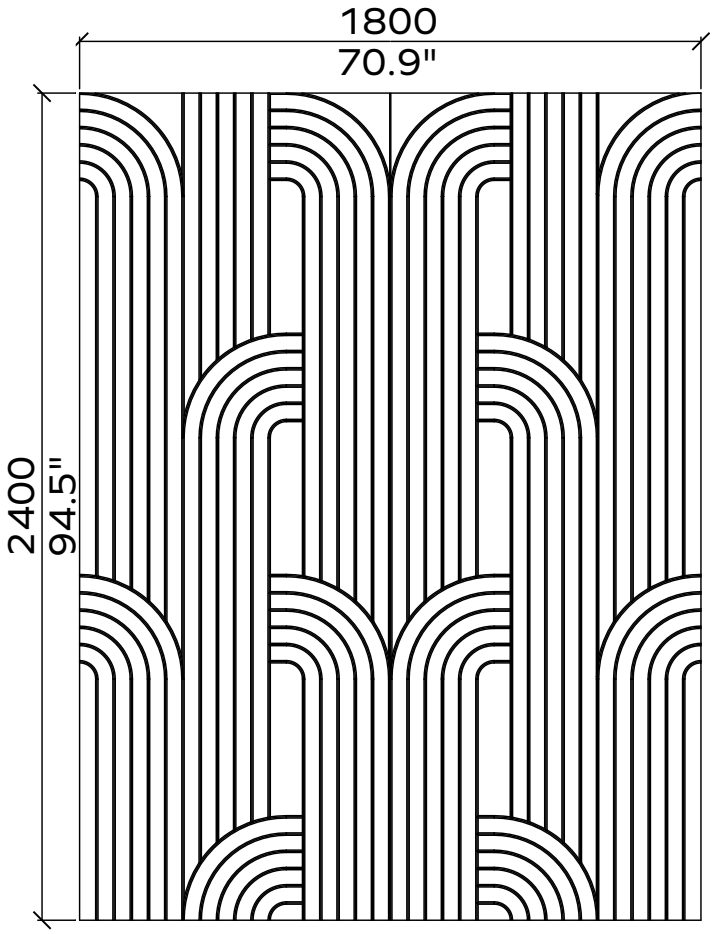

1x

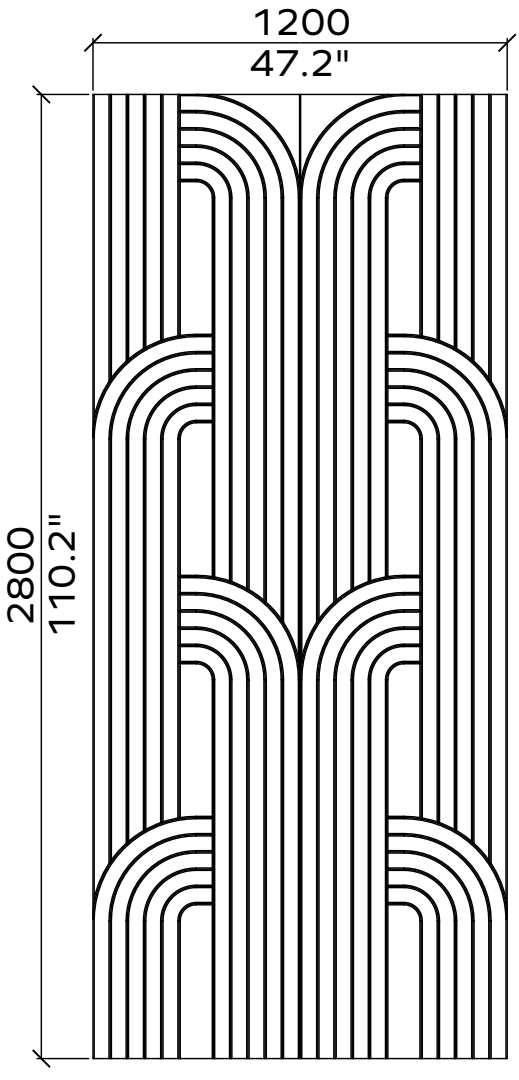

1x

All dimensions are nominal

ARCHISONIC®
Colours

HABITAT MATTER
habitatmatter.com
samples@habitatmatter.com

Name	Snow White	Cloud	Smoke	Slate	Charcoal	Raven	Ground	Gull	Milk
Code	**500**	**103**	**442**	**444**	**542**	**550**	**108**	**144**	**404**
NCS	S 0300-N	S 1002-B	S 3005-R80B	S 4500-N	S 7502-B	S 8500-N	S 5005-Y20R	S2502-Y	S 0502-Y

Name	Linen	Dune	Jute	Fallow	Warm Stone	Truffle	Sunshine	Honeycomb	Electric Orange
Code	**107**	**104**	**920**	**238**	**105**	**539**	**846**	**139**	**464**
NCS	S 1505-Y30R	S 2005-Y	S 3010-Y30R	S 5010-Y30R	S 3010-Y50R	S 8502-R	S 1040-Y10R	S 2050-Y20R	S 0580-Y70R

Name	Terracotta	Soft Coral	Cinnabar	Shell Pink	Garnet	Poster Red	Hot Pink	Grape	Marine Blue
Code	**239**	**516**	**725**	**102**	**724**	**662**	**140**	**540**	**864**
NCS	S 4040-Y70R	S 2020-Y90R	S 6030-R	S 0510-R30B	S 5040-R10B	S 1080-R	S 2060-R20B	**S 5040-R40B**	S 4050-R70B

Name	Midnight	Royal Blue	Winter Sky	Deep Sea	Nocturne	True Navy	Ice Blue	Pacific Ocean	Lagoon
Code	**810**	**865**	**410**	**918**	**866**	**194**	**304**	**432**	**917**
NCS	S 7020-R70B	S 3560-R80B	S 2020-R90 B	S 5020-R90B	S 8010-R90B	S8005-B	S 0510-B	S 3040-B	S 7020-B30G

Name	Succulent	Spearmint	Seafoam	Nordic Pine	Moss	Grove	Pistachio	Lichen	Fern
Code	**712**	**706**	**710**	**311**	**439**	**317**	**315**	**160**	**180**
NCS	S 3020-B30G	S 1010-B90G	S 3010-G30Y	S 5030-G10Y	S 2040-G40Y	S 7020-G30Y	S 5020-Y	**S4005-Y**	S6010-G90Y

These NCS codes are the closest visual match available and may not be exact to blended fibres.

ARCHISONIC®

Colours

Experience our ARCHISONIC® Felt material with a stunning selection of 45 colours across 9 distinct families, thoughtfully curated by *Colour Hive* in London. Effortlessly combine colours harmoniously to suit your preferences. Discover more in our Materials brochure and order your free sample box today.

Colour fastness

Class 6

ISO 105-B02:A1

Order a free sample box



ARCHISONIC® Felt
Material Specification

HABITAT MATTER
habitatmatter.com
spec@habitatmatter.com

Product Name	Archisonic® Felt	
Content	100% PET (60% certified post-consumer content)	
Thickness[1]	12mm (0.47")	24mm (0.94")
Max. Size	1200x2800mm (47"x110")	1800x2400mm (70"x94")
Acoustic[2]	**ASTM:** NRC=0.6 **ISO**: αw=0.65	**ASTM**: NRC=0.9 **ISO**: αw=0.95
Density[1]	2400 g/m² (0.49 lbs/ sqft)	4000 g/m² (0.82 lbs/sqft)
Color Fastness	**Class 6** ISO 105-B02:A1	
Color	**36 colors** (see Archisonic® Felt Color page for more information)	
Maintenance	For daily cleaning we recommend alcohol solution (75%), e.g. Pantasept. In case of contamination by dust or fluff, use feather duster or a regular vacuum cleaner. For heavy dirt, treat the material with hydrogen peroxide.	
Production Lead time[3]	21 days	
Fire Rating	DIN EN 13501-1: **B-s1, d0**	ASTM E84 **Class A**
VOC Emission	28 Days French Regulation **A+** ASTM E84 **Pass** Breeam® (International, UK, NL, SE, NOR) **Examplary** CDPH (CDPH/EHLB/Standard Method V1.2) **Pass**	
Certifications	Declare label, Cradle to Cradle, UL Environmental Product Declaration, Member of US Green Building Council, Ecobau 1st Priority, Climmate-KIC, VOC emissions in LEED EQ credit (low-emitting products), SCS Recycled Content	
Durability	Contract	

1 - all values are nominal 2 - measured with 300mm air cavity 3 - depending on the location and type of product

Climate-KIC is supported by the EIT, a body of the European Union

Wall Panels
Acoustic Performance

HABITAT MATTER
habitatmatter.com
spec@habitatmatter.com

University of Stuttgart
Germany

Testing Standards

ISO 354:2003	Acoustics — Measurement of sound absorption in a reverberation room
ISO 11654:1997	Acoustics — Sound absorbers for use in buildings — Rating of sound absorption
ISO 20189:2018	Acoustics — Screens, furniture and single objects intended for interior use — Rating of sound absorption and sound reduction of elements based on laboratory measurements
ASTM C423-17	Standard Test Method for Sound Absorption and Sound Absorption Coefficients by the Reverberation Room Method
ASTM E795-16	Standard Practices for Mounting Test Specimens During Sound Absorption Tests

Acoustic Test Results	αw	SAA	NRC
Archisonic 12mm (no air gap)	0.3 (MH)	0.42	0.45
Archisonic 12mm (50mm air gap)	0.4 (MH)	0.50	0.65
Archisonic 12mm (50mm insulation)	1.00	1.00	0.95
Archisonic 24mm (no air gap)	0.55 (MH)	0.70	0.70
Archisonic 24mm (50mm air gap)	0.65 (MH)	0.78	0.80
Archisonic 24mm (50mm insulation)	1.00	1.00	1.00

The NRC rating is calculated as the average of the absorption coefficients measured at frequencies of 250Hz, 500Hz, 1000Hz and 2000Hz and round to the nearest 0.05. SAA rating is calculated as the average of the sound absorption coefficients of a material for the twelve one-third octave bands from 200Hz through 2500Hz and rounded off to the nearest 0.01.

Acoustic Performance

Frequency (Hz)		125	250	500	1000	2000	4000
Archisonic 12mm (no air gap)	α_p	0.05	0.05	0.25	0.55	0.85	1.00
Archisonic 12mm (50mm air gap)	α_p	0.10	0.30	0.60	0.90	1.00	1.00
Archisonic 12mm (50mm insulation)	α_p	0.35	0.85	1.00	1.00	1.00	1.00
Archisonic 24mm (no air gap)	α_p	0.05	0.25	0.55	0.90	1.00	1.00
Archisonic 24mm (50mm air gap)	α_p	0.15	0.35	0.75	1.00	1.00	1.00
Archisonic 24mm (50mm insulation)	α_p	0.40	0.90	1.00	1.00	1.00	1.00

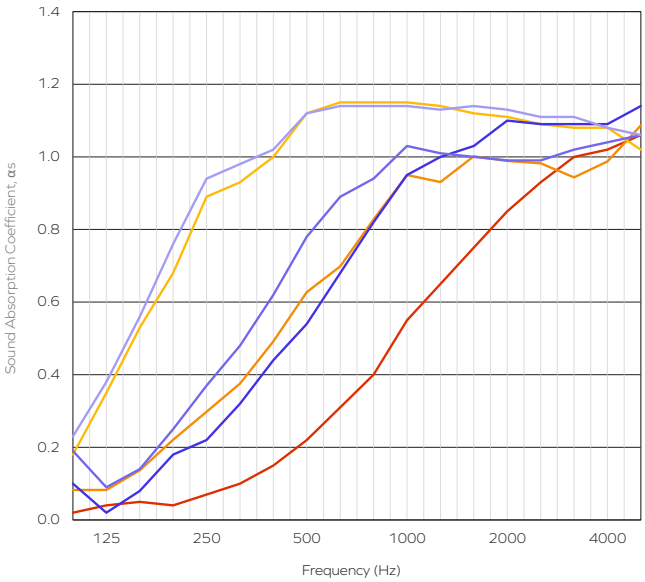

- Archisonic 12mm (no air gap)
- Archisonic 12mm (50mm air gap)
- Archisonic 12mm (50mm insulation)
- Archisonic 24mm (no air gap)
- Archisonic 24mm (50mm air gap)
- Archisonic 24mm (50mm insulation)

The table represents the practical sound absorption coefficient (α_p) in accordance with ISO 11654. The graph represents the sound absorption coefficients (αs) in the third octave band center frequencies in accordance with ISO 354. Measurement used Pink Noise as excitation signal in a reverberant room.