IMPACT ACOUSTIC®

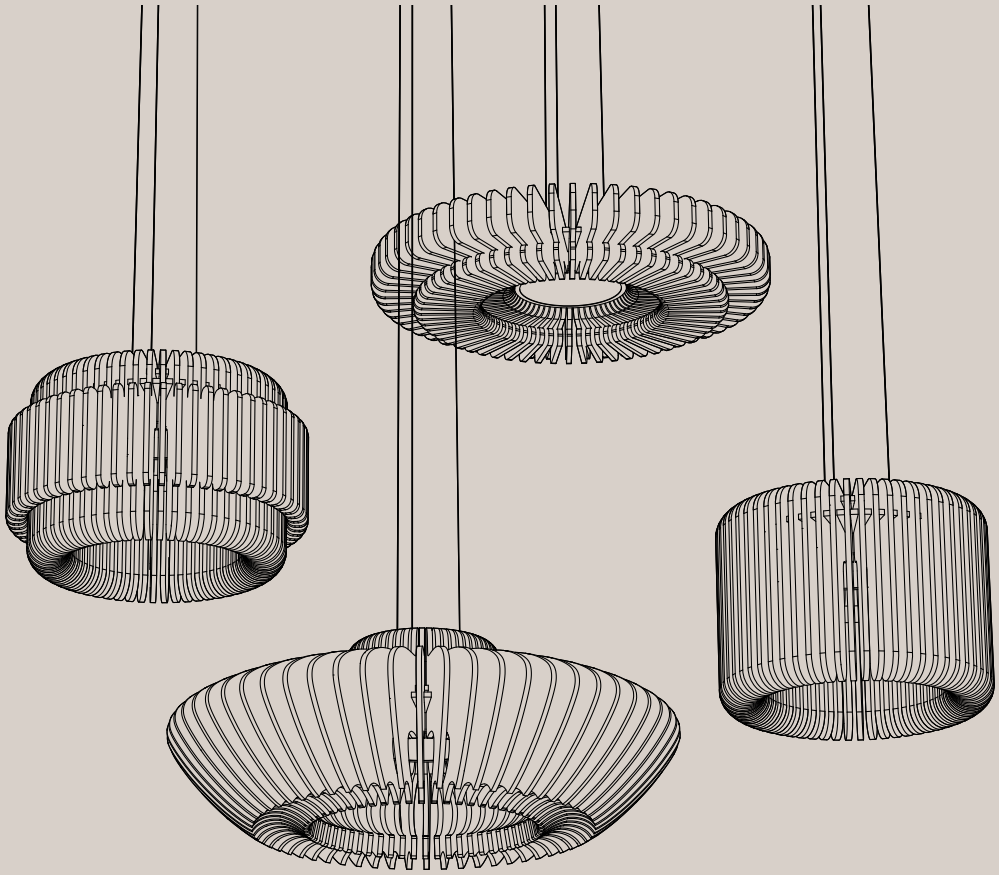

RAYA Collection

Acoustic Lighting

722.12.51.000.00 722.12.55.000.00
722.12.52.000.00 722.12.56.000.00
722.12.53.000.00 722.12.57.000.00
722.12.54.000.00 722.12.58.000.00

TECHNICAL DATA SHEET

HABITAT MATTER
habitatmatter.com
spec@habitatmatter.com

RAYA Collection
Acoustic Lighting

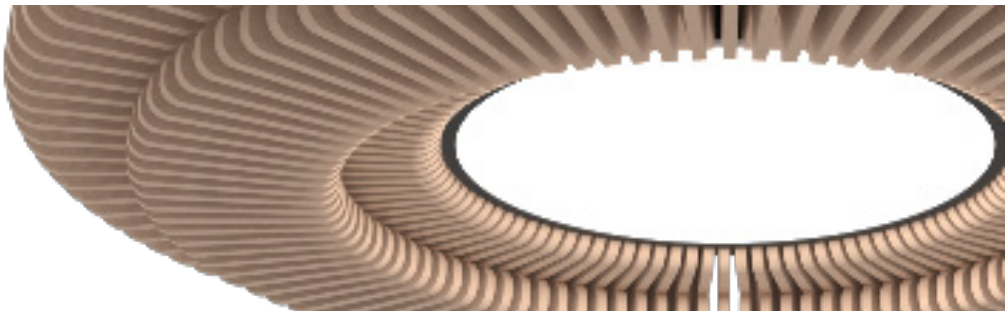

Data

Applicable Article numbers

	Small	Medium
Aurelia	722.12.51.000.00	722.12.52.000.00
Alba	722.12.53.000.00	722.12.54.000.00
Covo	722.12.55.000.00	722.12.56.000.00
Helia	722.12.57.000.00	722.12.58.000.00

Material

Vertical Slats	ARCHISONIC® Felt - 100% PET (60% Post-consumer) in 36 colours and 9 Riftcut printed texture
LED Circular Disk	Steel (RAL9005)

Extended document available

Weight[1]

Full assembly	9 - 23.5 kg (±10%)	19.84 - 51.8 lbs (±10%)

Included

Acoustic light Shade

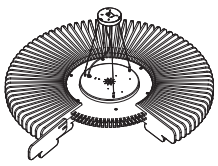

Lighting module and Ceiling Canopy with Suspension

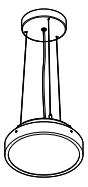

Installation guide

Warranty 2 years[2]

1 - all weight values are nominal

2 - Impact Acoustic warranty terms apply

HABITAT MATTER
habitatmatter.com
spec@habitatmatter.com

RAYA Collection
Specification Guide

Ensure you make the perfect choice by choosing our solutions for your next project. To get started, simply define some basic information and constraints about your space. Then explore our range of standard solutions or contact us directly for a more in-depth discussion of customized options.

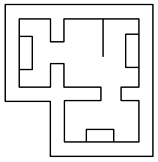

Project Area

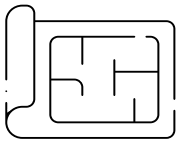

Ceiling Plans (RCP)

page 7



Other Considerations

page 7



Design

pages 6-9

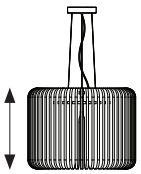

Size

page 6-9

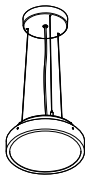

LED Disk Temperature

page 4 and 5

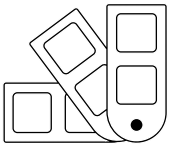

Colour and Texture

page 10 and 11

HABITAT MATTER
habitatmatter.com
spec@habitatmatter.com

RAYA Collection

Acoustic Lighting

ARTICLE NUMBERS

Diffuser Diameter
280mm / 11 1/32"



Ø 600 mm
23 5/8"
H 450 mm
17 23/32"
AURELIA
SMALL
(722.12.51)

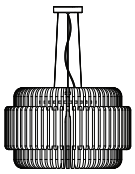

Ø 700 mm
27 9/16"
H 450 mm
17 23/32"
ALBA
SMALL
(722.12.53)



Ø 800 mm
31 1/2"
H 300 mm
11 13/16"
COVO
SMALL
(722.12.55)

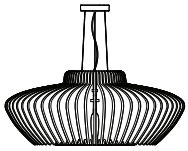

Ø 1000 mm
39 3/8"
H 415 mm
16 11/32"
COVO
MEDIUM
(722.12.56)

Diffuser Diameter
570mm / 22 7/16"



Ø 900 mm
35 7/16"
H 500 mm
19 11/16"
AURELIA
MEDIUM
(722.12.52)

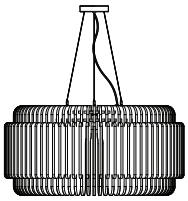

Ø 1000 mm
39 3/8"
H 500 mm
19 11/16"
ALBA
MEDIUM
(722.12.54)

Lighting Product	Product Size	Colour code	Dimming	CCT	Market Voltages
722.12.	**51.** (Aurelia S) **52.** (Aurelia M) **53.** (Alba S) **54.** (Alba M) **55.** (Covo S) **56.** (Covo M)	Choose colour as shown on pg. 3	**00.** (DALI) **20.** (0-10V)	**30** (3000 K) **40** (4000 K) (other CCT on requests)	**Standard Voltage** (220 - 240 V) **A** for USA Market (110 - 277 V)

Example1: 722.12.51.706.00.40

Aurelia Small [(600x450mm /23.62"x17.72", Spearmint 706 colour, DALI, 4000K CCT, 220-240V (EU)]

Example2: 722.12.54.706.20.30A

Alba Medium [(1000x500mm /39.37"x19.69", Spearmint 706 colour, 0-10V, 3000K CCT, 110-277V (USA & Canada)]

LIGHTING SPECIFICATIONS

	722.12.51, 53, 55, 56		722.12.52, 54	
Output	Direct		Direct	
Wattage (W)	27		55	
CCT (K)	3000	4000	3000	4000
Lumen LED source (lm)	2850	2920	7250	7655
Total Lumen Output (lm)	1945	1995	4910	4989
Efficacy (lm/W)	72	74	90	92
Diffuser	Opal			
Dimming	0-10V / DALI			
CRI	90			
Voltage (V)	220 - 240 / 110 - 277			
Driver Location	On-Board			

LIGHT DISTRIBUTION GRAPH

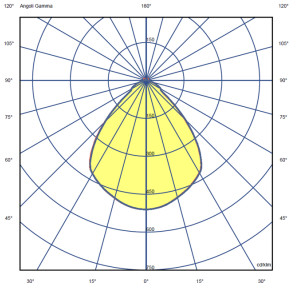

Aurelia S
Alba S
Covo S
Covo M

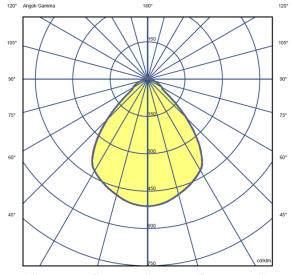

Aurelia M
Alba M

CERTIFICATIONS

CE UL

HABITAT MATTER
habitatmatter.com
spec@habitatmatter.com

RAYA Collection

Geometry Information

ARTICLE NUMBERS

Diffuser Diameter
280mm / 11 1/32”

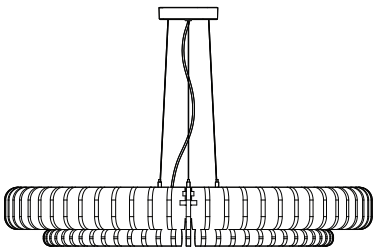

Ø 1000 mm
39 3/8”

H 160mm
6 19/64”

HELIA
SMALL
(722.12.57)

Diffuser Diameter
570mm / 22 7/16”

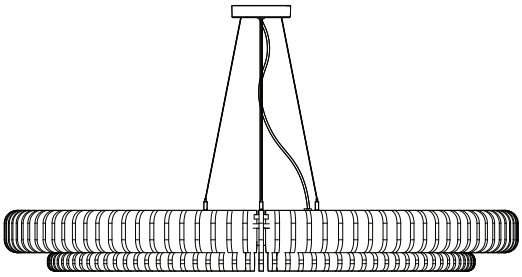

Ø 1200 mm
47 1/4”

H 165mm
6 1/2”

HELIA
MEDIUM
(722.12.58)

Lighting Product	Product Size	Colour code	Dimming	CCT	Market Voltages
722.12.	**57.** (Helia S)	Choose colour as shown on pg. 3	**00.** (DALI) **20.** (0-10V)	**30** (3000 K) **40** (4000 K) (other CCT on requests)	**Standard Voltage** (220 - 240 V) **A** for USA Market (110 - 277 V)
	58. (Helia M)				

Example1: 722.12.57.105.00.40

Helia Small [(1000x160mm /39.37”x6.3”, Warmstone 105 colour, DALI, 4000K CCT, 220-240V (EU)]

Example2: 722.12.58.107.20.30A

Helia Medium [(1200x165mm /47.24”x6.5”, Linen 107 colour, 0-10V, 3000K CCT, 110-277V (USA & Canada)]

LIGHTING SPECIFICATIONS

	722.12.57		722.12.58	
Output	Direct		Direct	
Wattage (W)	27		55	
CCT (K)	3000	4000	3000	4000
Lumen LED source (lm)	2850	2920	7250	7655
Total Lumen Output (lm)	1945	1995	4910	4989
Efficacy (lm/W)	72	74	90	92
Diffuser	Opal			
Dimming	0-10V / DALI			
CRI	90			
Voltage (V)	220 - 240 / 110 - 277			
Driver Location	On-Board			

LIGHT DISTRIBUTION GRAPH

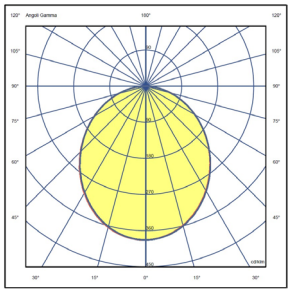

Helia S

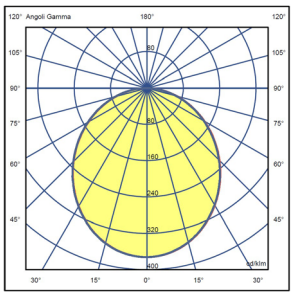

Helia M

CERTIFICATIONS

CE UL

HABITAT MATTER
habitatmatter.com
spec@habitatmatter.com

RAYA Collection

Geometry Information

1 RAYA - Aurelia 600mm *722.12.51.000.00*

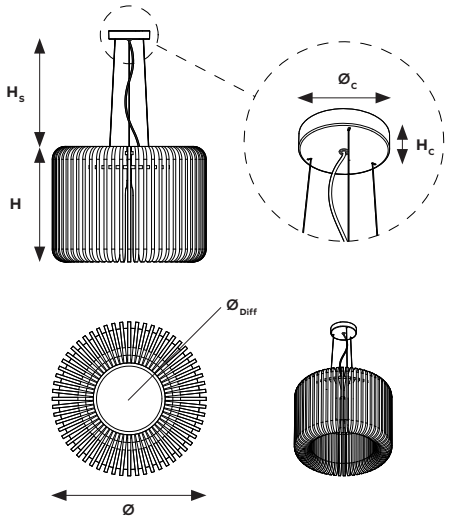

Dimensions[1]

Ø	Diameter	600mm / 23 5/8"
H	Height	450mm / 17 23/32"
H_s	Suspension Height	1500mm / 59 1/16"
H_c	Ceiling Canopy Height	35mm / 1 3/8"
$Ø_C$	Ceiling Canopy Diameter	160mm / 6 19/64"
$Ø_{Diff}$	Diffuser Diameter	280mm / 11 1/32"
	Weight	10.5 kg

2 RAYA - Aurelia 900mm *722.12.52.000.00*

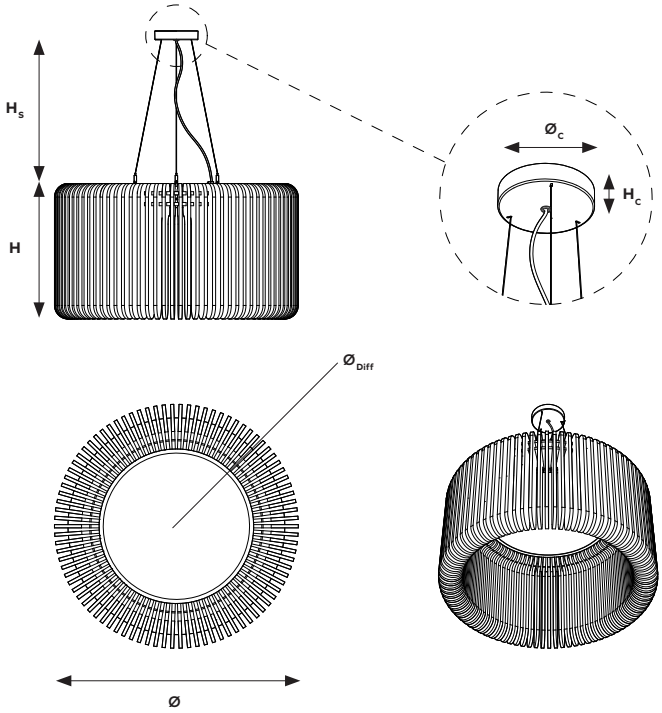

Dimensions[1]

Ø	Diameter	900mm / 35 7/16"
H	Height	500mm / 19 11/16"
H_s	Suspension Height	1500mm / 59 1/16"
H_c	Ceiling Canopy Height	35mm / 1 3/8"
$Ø_C$	Ceiling Canopy Diameter	160mm / 6 19/64"
$Ø_{Diff}$	Diffuser Diameter	570mm / 22 7/16"
	Weight	20 kg

1 - All dimensions are nominal

HABITAT MATTER
habitatmatter.com
spec@habitatmatter.com

RAYA Collection

Geometry Information

1 RAYA- Alba 700mm *722.12.53.000.00*

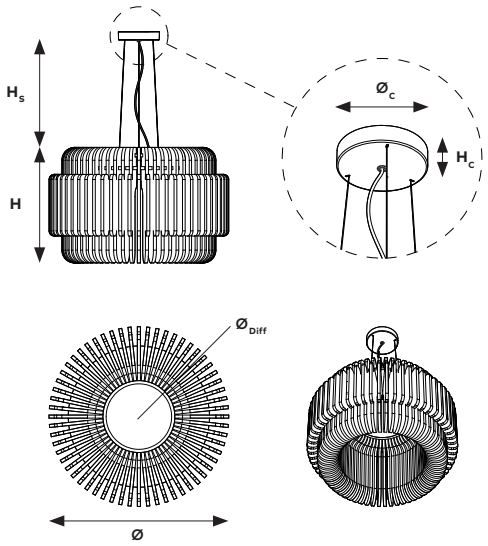

Dimensions[1]

Ø	Diameter	700mm / 27 9/16"
H	Height	450mm / 17 23/32"
H_s	Suspension Height	1500mm / 59 1/16"
H_c	Ceiling Canopy Height	35mm / 1 3/8"
$Ø_C$	Ceiling Canopy Diameter	160mm / 6 19/64"
$Ø_{Diff}$	Diffuser Diameter	280mm / 11 1/32"
	Weight	12 Kg

2 RAYA - Alba 1000mm *722.12.54.000.00*

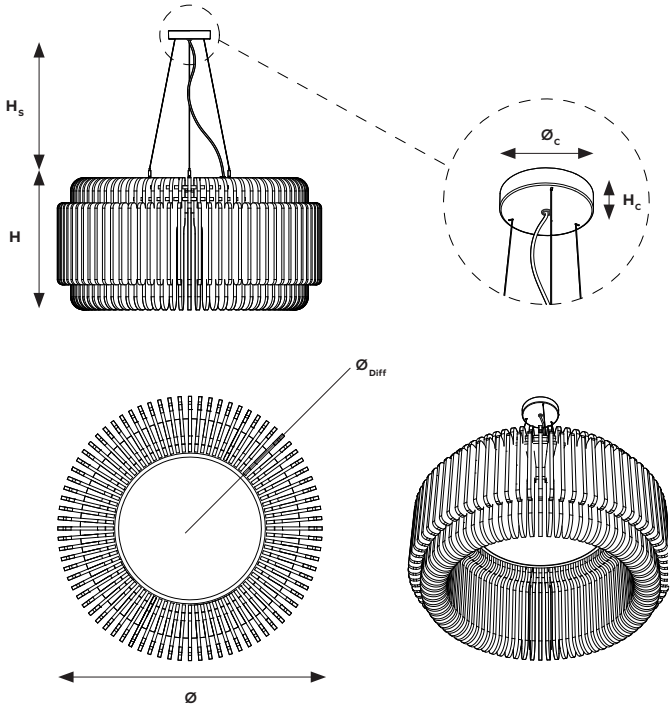

Dimensions[1]

Ø	Diameter	1000mm / 39 3/8"
H	Height	500mm / 19 11/16"
H_s	Suspension Height	1500mm / 59 1/16"
H_c	Ceiling Canopy Height	35mm / 1 3/8"
$Ø_C$	Ceiling Canopy Diameter	160mm / 6 19/64"
$Ø_{Diff}$	Diffuser Diameter	570mm / 22 7/16"
	Weight	23.5 Kg

1 - All dimensions are nominal

HABITAT MATTER
habitatmatter.com
spec@habitatmatter.com

RAYA Collection

Geometry Information

1 RAYA - Covo 800mm *722.12.55.000.00*

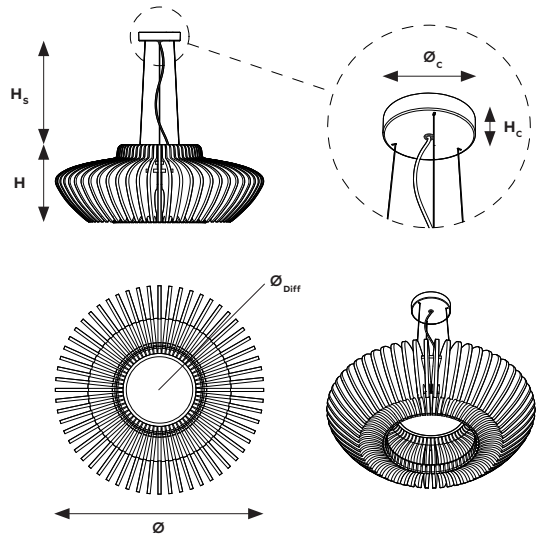

Dimensions[1]

Ø	Diameter	800mm / 31 1/2"
H	Height	300mm / 11 13/16"
H_s	Suspension Height	1500mm / 59 1/16"
H_c	Ceiling Canopy Height	35mm / 1 3/8"
$Ø_C$	Ceiling Canopy Diameter	160mm / 6 19/64"
$Ø_{Diff}$	Diffuser Diameter	280mm / 11 1/32"
	Weight	9 Kg

2 RAYA - Covo 1000mm *722.12.56.000.00*

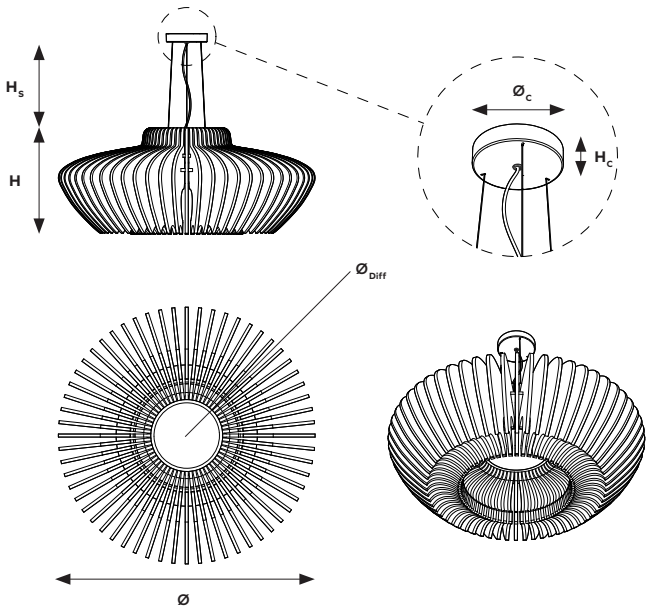

Dimensions[1]

Ø	Diameter	1000mm / 39 3/8"
H	Height	415mm / 16 11/32"
H_s	Suspension Height	1500mm / 59 1/16"
H_c	Ceiling Canopy Height	35mm / 1 3/8"
$Ø_C$	Ceiling Canopy Diameter	160mm / 6 19/64"
$Ø_{Diff}$	Diffuser Diameter	280mm / 11 1/32"
	Weight	14 Kg

1 - All dimensions are nominal

HABITAT MATTER
habitatmatter.com
spec@habitatmatter.com

RAYA Collection

Geometry Information

1 RAYA - Helia 1000mm *722.12.57.000.00*

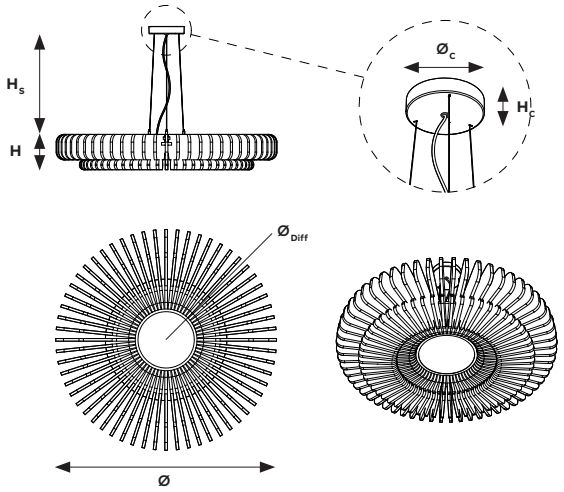

Dimensions[1]

Ø	Diameter	1000mm / 39 3/8”
H	Height	160mm / 6 19/64”
H_S	Suspension Height	1500mm / 59 1/16”
H_c	Ceiling Canopy Height	35mm / 1 3/8”
$Ø_C$	Ceiling Canopy Diameter	160mm / 6 19/64”
$Ø_{Diff}$	Diffuser Diameter	280mm / 11 1/32”
	Weight	10 Kg

2 RAYA - Helia 1200mm *722.12.58.000.00*

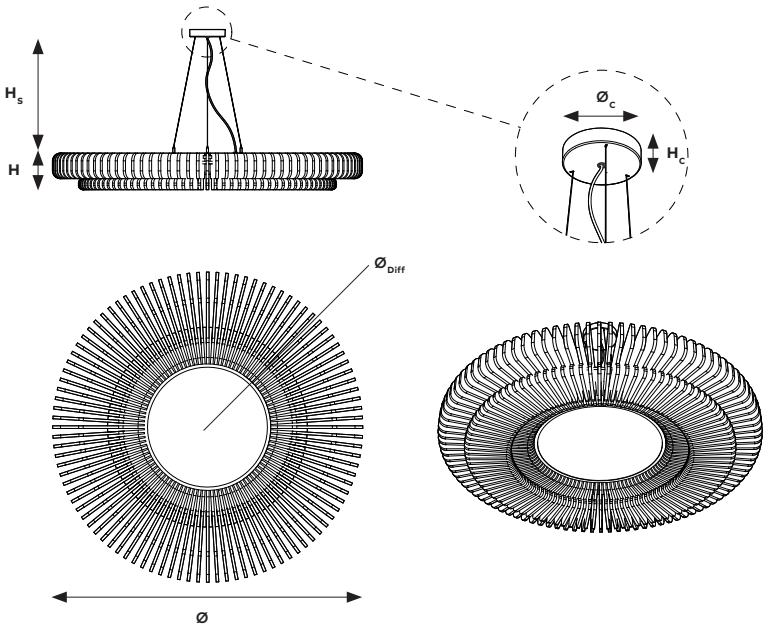

Dimensions[1]

Ø	Diameter	1200mm / 47 1/4”
H	Height	165mm / 6 1/2”
H_S	Suspension Height	1500mm / 59 1/16”
H_c	Ceiling Canopy Height	35mm / 1 3/8”
$Ø_C$	Ceiling Canopy Diameter	160mm / 6 19/64”
$Ø_{Diff}$	Diffuser Diameter	570mm / 22 7/16”
	Weight	20.5 Kg

1 - All dimensions are nominal

HABITAT MATTER
habitatmatter.com
spec@habitatmatter.com

ARCHISONIC®
Colours

HABITAT MATTER
habitatmatter.com
samples@habitatmatter.com

									
Name	Snow White	Cloud	Smoke	Slate	Charcoal	Raven	Ground	Gull	Milk
Code	**500**	**103**	**442**	**444**	**542**	**550**	**108**	**144**	**404**
NCS	S 0300-N	S 1002-B	S 3005-R80B	S 4500-N	S 7502-B	S 8500-N	S 5005-Y20R	S2502-Y	S 0502-Y

									
Name	Linen	Dune	Jute	Fallow	Warm Stone	Truffle	Sunshine	Honeycomb	Electric Orange
Code	**107**	**104**	**920**	**238**	**105**	**539**	**846**	**139**	**464**
NCS	S 1505-Y30R	S 2005-Y	S 3010-Y30R	S 5010-Y30R	S 3010-Y50R	S 8502-R	S 1040-Y10R	S 2050-Y20R	S 0580-Y70R

									
Name	Terracotta	Soft Coral	Cinnabar	Shell Pink	Garnet	Poster Red	Hot Pink	Grape	Marine Blue
Code	**239**	**516**	**725**	**102**	**724**	**662**	**140**	**540**	**864**
NCS	S 4040-Y70R	S 2020-Y90R	S 6030-R	S 0510-R30B	S 5040-R10B	S 1080-R	S 2060-R20B	**S 5040-R40B**	S 4050-R70B

									
Name	Midnight	Royal Blue	Winter Sky	Deep Sea	Nocturne	True Navy	Ice Blue	Pacific Ocean	Lagoon
Code	**810**	**865**	**410**	**918**	**866**	**194**	**304**	**432**	**917**
NCS	S 7020-R70B	S 3560-R80B	S 2020-R90 B	S 5020-R90B	S 8010-R90B	S8005-B	S 0510-B	S 3040-B	S 7020-B30G

									
Name	Succulent	Spearmint	Seafoam	Nordic Pine	Moss	Grove	Pistachio	Lichen	Fern
Code	**712**	**706**	**710**	**311**	**439**	**317**	**315**	**160**	**180**
NCS	S 3020-B30G	S 1010-B90G	S 3010-G30Y	S 5030-G10Y	S 2040-G40Y	S 7020-G30Y	S 5020-Y	**S4005-Y**	S6010-G90Y

These NCS codes are the closest visual match available and may not be exact to blended fibres.

ARCHISONIC®

Colours

Experience our ARCHISONIC® Felt material with a stunning selection of 45 colours across 9 distinct families, thoughtfully curated by *Colour Hive* in London. Effortlessly combine colours harmoniously to suit your preferences. Discover more in our Materials brochure and order your free sample box today.

Colour fastness

Class 6

ISO 105-B02:A1

Order a free sample box

ARCHISONIC® Riftcut Natural Collection

Natural Collection colour sets

Riftcut Natural Collection (NC) is a natural wood shade extension to our bestselling Riftcut. Developed in collaboration with German veneer specialists Schotten & Hansen, ARCHISONIC® Riftcut NC introduces 3 different colour groups: elegant brights, essential mids and classical darks.

107

ELEGANT BRIGHTS



240 Pebble



241 Sunlit



242 Blush

920

ESSENTIAL MIDS



243 Malt



244 Honey



245 Mocha

105

CLASSICAL DARKS



246 Woodsmoke



247 Bourbon



248 Twilight

Sustainable Ink

CP65 and RoHS3 compliant

GREENGUARD

PRODUCT CERTIFIED FOR LOW CHEMICAL EMISSIONS
UL.COM/GG
UL 2818

GOLD

Order a free sample set



HABITAT MATTER

habitatmatter.com
spec@habitatmatter.com

ARCHISONIC® Felt
Material Specification

Product Name	ARCHISONIC® Felt	
Content	100% PET (60% certified post-consumer content)	
Thickness[1]	12mm (0.47")	24mm (0.94")
Max. Size	1200x2800mm (47"x110")	1800x2400mm (70"x94")
Acoustic[2]	**ASTM:** NRC=0.6 **ISO**: αw=0.65	**ASTM**: NRC=0.9 **ISO**: αw=0.95
Density[1]	2400 g/m² (0.49 lbs/ sqft)	4000 g/m² (0.82 lbs/sqft)
Colour Fastness	**Class 6** ISO 105-B02:A1	
Colour	**36 colours** (see ARCHISONIC® Felt Colour page for more information)	
Maintenance	For daily cleaning we recommend alcohol solution (75%), e.g. Pantasept. In case of contamination by dust or fluff, use feather duster or a regular vacuum cleaner. For heavy dirt, treat the material with hydrogen peroxide.	
Production Lead time[3]	21 days	
Fire Rating	DIN EN 13501-1: **B-s1, d0**	ASTM E84 **Class A**
VOC Emission	28 Days French Regulation **A+** ASTM E84 **Pass** Breeam® (International, UK, NL, SE, NOR) **Exemplary** CDPH (CDPH/EHLB/Standard Method V1.2) **Pass**	
Certifications	Declare label, Cradle to Cradle, UL Environmental Product Declaration, Member of US Green Building Council, Ecobau 1st Priority, Climate-KIC, VOC emissions in LEED EQ credit (low-emitting products), SCS Recycled Content	
Durability	Contract	

1 - all values are nominal 2 - measured with 300mm air cavity 3 - depending on the location and type of product

Climate-KIC is supported by the EIT, a body of the European Union

HABITAT MATTER
habitatmatter.com
spec@habitatmatter.com

ARCHISONIC® Felt (Printed option) Material Specification

Product Name	ARCHISONIC® Felt
Content	100% PET (60% certified post-consumer content)
Thickness[1]	12mm (0.47”)
Max. Size	1200x2800mm (47”x110”)
Acoustic[2, 4]	**ASTM:** NRC=0.6 **ISO**: αw=0.65
Density[1]	2400 g/m² (0.49 lbs/ sqft)
Colour	**33** printed finishes.
Maintenance	To prevent dust and stains, regularly dust or vacuum with a soft brush. Avoid tools that might scratch the surface. Use mild detergents sparingly for tough stains, blotting instead of rubbing with a microfiber cloth. Test cleaning methods on a hidden area first to check for adverse effects.
Lead Time[3, 4]	21 days
Fire Rating[4]	DIN EN 13501-1: **B-s1, d0** ASTM E84 **Class A**
VOC Emission[4]	28 Days French Regulation **A+** ASTM E84 **Pass** Breeam® (International, UK, NL, SE, NOR) **Exemplary** CDPH (CDPH/EHLB/Standard-Methode V1.2) **Pass**
Certifications[4]	Declare label, Cradle to Cradle, UL Environmental Product Declaration, Member of US Green Building Council, Ecobau 1st Priority, Climate-KIC, VOC emissions in LEED EQ credit (low-emitting products), SCS Recycled Content
Ink Certifications	UL Greenguard, No NVC, No VOCs, No TPO, Vegan, compliant with California Prop65 (CP65) and European Directive RoHS3
Durability	Contract

1 - all values are nominal 2 - measured with 300mm air cavity 3 - depending on the location and type of product

Climate-KIC is supported by the EIT, a body of the European Union

HABITAT MATTER
habitatmatter.com
spec@habitatmatter.com